CFMOTO X8 HO / CFORCE 850 / 850XC

Material: Aluminium

Main parts of skid plate set

Part name	Part number	Fitting
Main part	40.3616	2 x Bolt M6x16 2 x Bolt M6x30
		3 x Screw M6x20 28 x Screw M8x20
		6 x Screw M8x25 6 x Screw M8x30
		2 x Screw M8x50 2 x Washer 8 small
		2 x Nut M8 7 x Washer 6 G
		5 x Washer 6 2 x Washer 8 DIN 125A
		36 x Washer 8G 10 x Washer 8
		34 x SD 28000 1) 2 x Hook
		2) 6 x SD 3008 3) 6 x SD 3006
		4) 6 x Hook 5) 2 x Clamp
		6) 2 x Clamp 7) 2 x Clamp
		8) 1 x Bracket

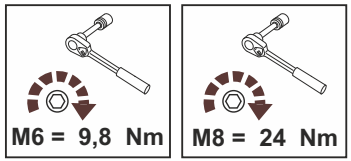

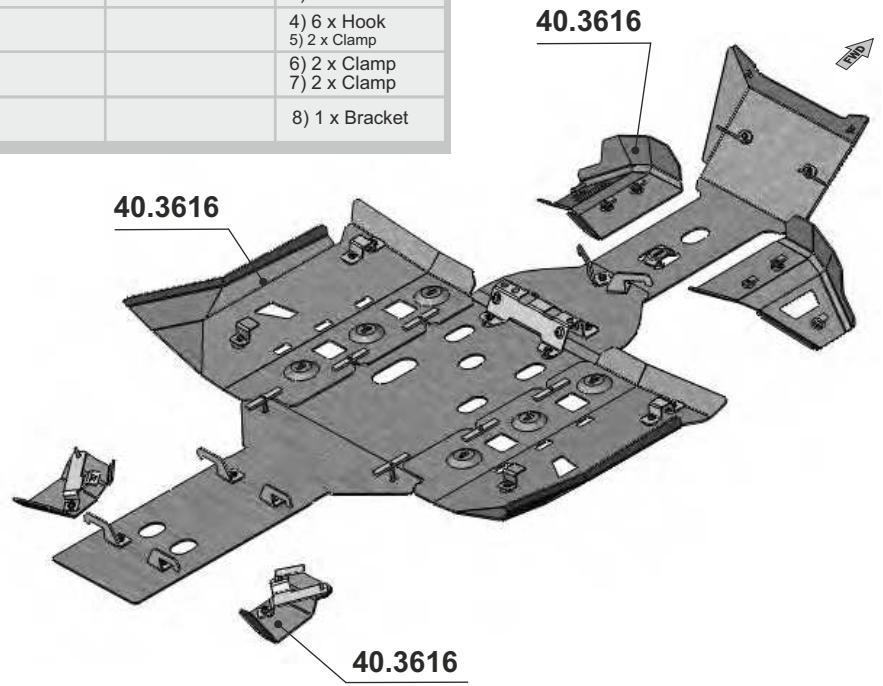

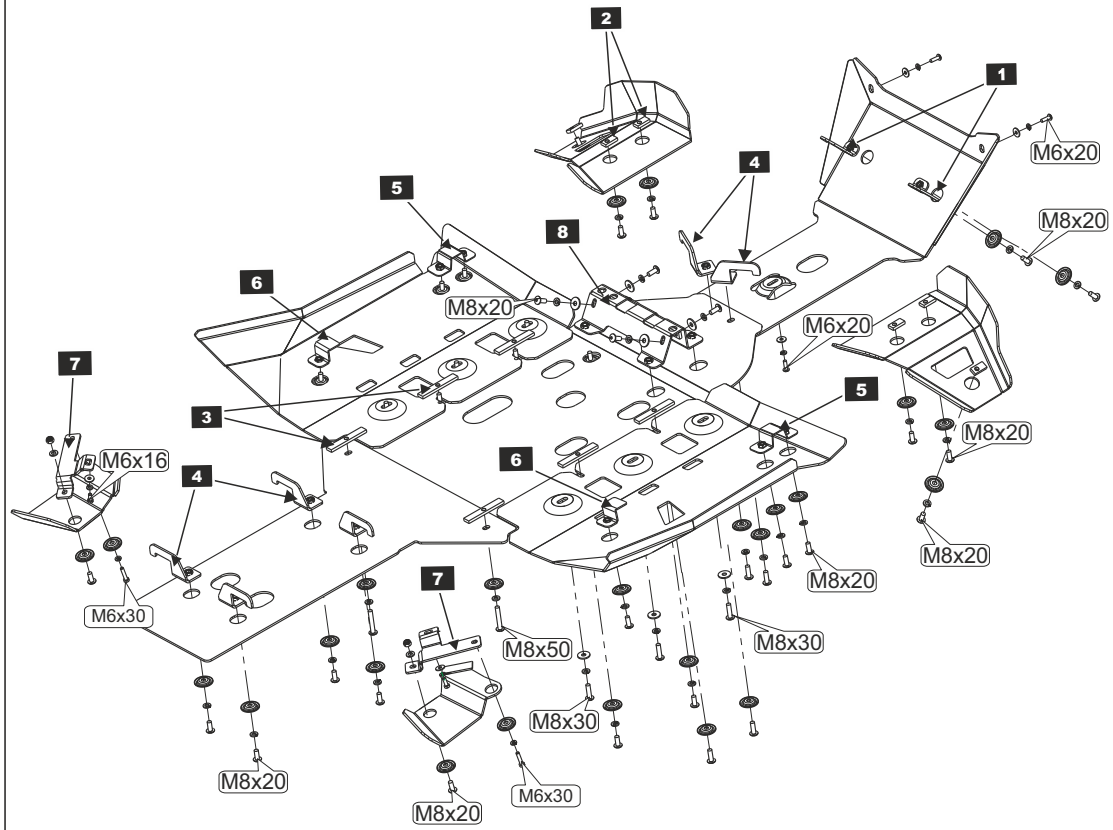

CFMOTO X8 HO / CFORCE 850 / 850XC, Installation the skid plate.

1. Remove plastic stock protection.
2. Install in a transverse profile beam of the frame of the ATV, the bracket 8 using bolts M8x20 and the threaded inserts, shown as the scheme.
3. Install the back part of the skid plate using hooks “4”.
4. Install clamps "5" on the frame elements of the ATV.
5. Install the side steps of skid plate at the regular and created the mounting points.
6. To get back and install the bracket “6”.
7. At the mounting points of the bracket “8”, install the middle part of the bottom protection in the position shown in the diagram.
8. Join the middle part and the back part of the skid plate with the side steps using the threaded inserts“3”.
9. Install the front part of the skid plate using the standard regular points and hooks "1”, " 4 ".
10. Install the front A arms of the skid plate.
11. Install the skid plate the back joints using standard points and brackets shown as the scheme.
12. Tighten all fastening points.

www.stormprotect.ru